CLASS "A" TRENCH BEDDING

REINFORCED A_s = 1.0% L_f = 4.6
REINFORCED A_s = 0.4% L_f = 3.4
PLAIN L_f = 2.8

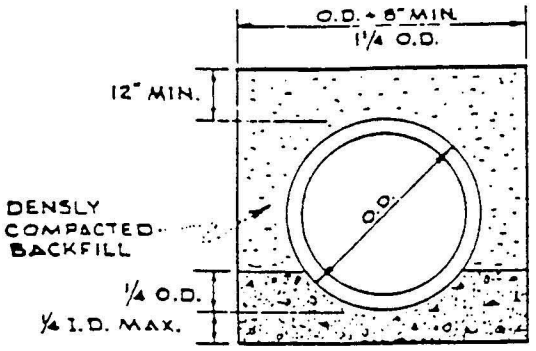

SECTION OF TRENCH SHOWING CONCRETE CRADLE

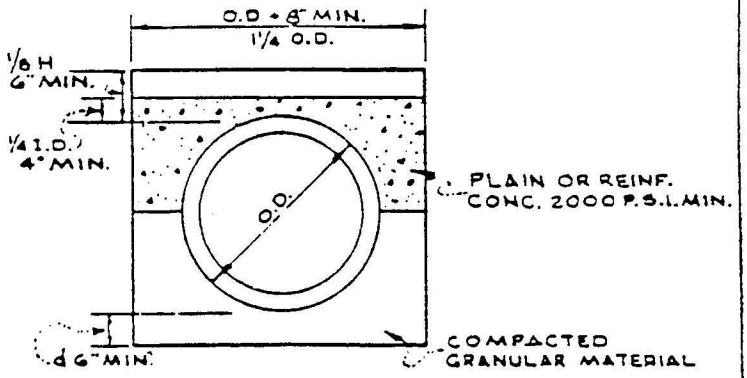

SECTION OF TRENCH SHOWING CONCRETE ARCH

CLASS "B" TRENCH BEDDING

L_f = 1.9

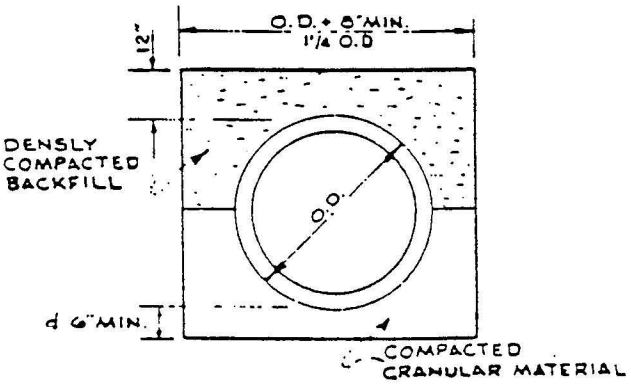

SECTION OF TRENCH SHOWING GRANULAR FOUNDATION

CLASS "C" TRENCH BEDDING

L_f = 1.5

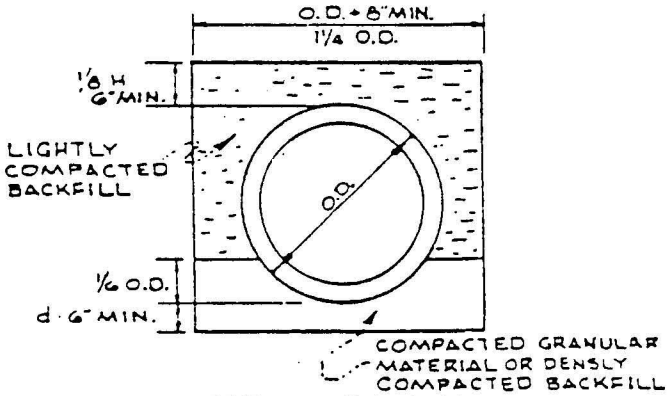

SECTION OF TRENCH SHOWING GRANULAR FOUNDATION

NOTE:

FOR ROCK OR OTHER INCOMPRESSIBLE MATERIALS, THE TRENCH SHOULD BE OVER EXCAVATED A MINIMUM OF 6" INCHES AND REFILLED WITH GRANULAR MATERIAL.

LEGEND:

O.D. = OUTSIDE DIAMETER
I.D. = INSIDE DIAMETER
H. = BACKFILL COVER ABOVE TOP OF PIPE
d = DEPTH OF BEDDING MATERIAL BELOW PIPE
A_s = AREA OF TRAVERSE STEEL IN THE CRADLE OR ARCH EXPRESSED AS A % OF AREA OF CONCRETE AT INVERT OR CROWN.
L_f = LIVE LOAD

PIPE BEDDING	
PLATE 1	
603.04	